BALLUFF
BIS S
Identification Systems
BALLUFF
BIS S
BALLUFF
BIS S
BALLUFF
BIS S
BALLUFF
BIS S

BIS S

For large quantities of data in assembly and production. Flexible and robust, even in high-speed applications

180 Data carriers
182 Read/write heads
184 Processors
190 Handy Programmer
191 Installation notes
Read/write times

BIS S

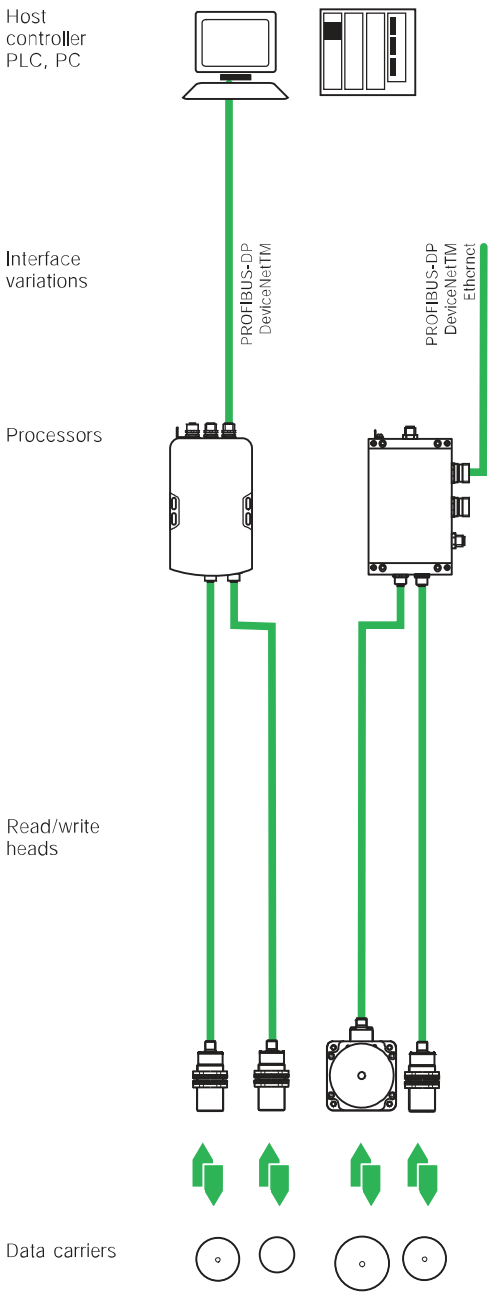

Dimensions	**52×32×11**
Housing material	PBTP
Antenna type	round
Weight	27 g

more added value

Benefit from a large storage capacity

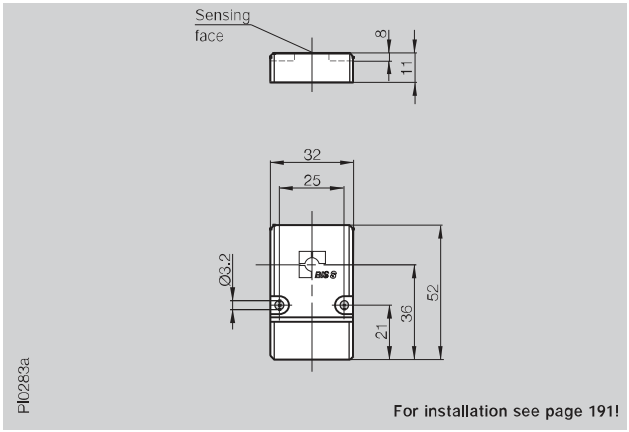

For installation see page 191!

BIS S Programmable

16 kBytes	Ordering code	BIS S-108-42/L
32 kBytes	Ordering code	BIS S-108-52/L

Operating temperature				–20...+70 °C
Storage temperature				–20...+70 °C
Protection per IEC 60529				IP 67
Mounting in steel			non-flush	
Appropriate read/write head		BIS S-302	20 mm	
with max. read/write distance		BIS S-303	20 mm	

Dimensions	80×40×22
Housing material	POM
Antenna type	round
Weight	93 g

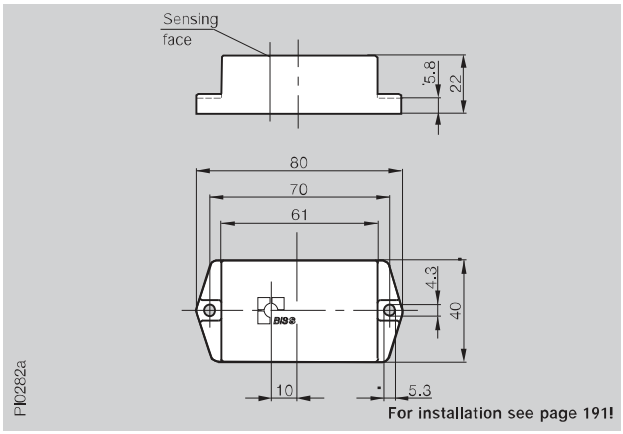

For installation see page 191!

BIS S Programmable

16 kBytes	Ordering code	BIS S-150-42/A
32 kBytes	Ordering code	BIS S-150-52/A

Operating temperature	–20...+70 °C
Storage temperature	–20...+70 °C
Protection per IEC 60529	IP 67

			non-flush
Mounting in steel			
Appropriate read/write head	BIS S-301	50 mm	
with max. read/write distance			

Read/write cycles

Data carriers	Memory type	Write cycles	Read cycles	Memory organization
16 kBytes	FRAM	unlimited	unlimited	64 bytes per block
32 kBytes	FRAM	unlimited	unlimited	128 bytes per block

Dimensions	40×40×138	40×40×138
Housing material	ABS	ABS
Antenna type	round	round
Weight	220 g	220 g

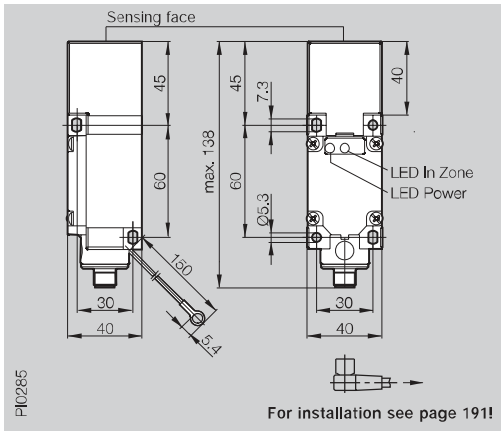

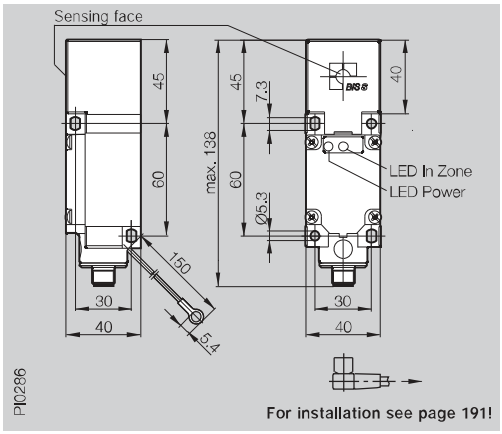

Ordering code	BIS S-302-S115	BIS S-303-S115
Mounting in steel	non-flush	non-flush
Operating temperature	0...+70 °C	0...+70 °C
Storage temperature	–20...+85 °C	–20...+85 °C
Protection per IEC 60529	IP 67	IP 67
Connection to	Processor	Processor
With connection cable	BIS Z-501-PU1-_ _*, BIS Z-502-PU1-_ _*	BIS Z-501-PU1-_ _*, BIS Z-502-PU1-_ _*

Appropriate data carrier		BIS S-108-_ _/L non-flush	BIS S-108-_ _/L non-flush
Static mode			
Write distance in mm		5-20	5-20
Read distance in mm		5-20	5-20
Offset in mm at distance	5 mm	±5	±5
	7 mm	±5	±5
	10 mm	±5	±5
	15 mm	±5	±5
	20 mm	±5	±5
	30 mm		
	50 mm		

Example:

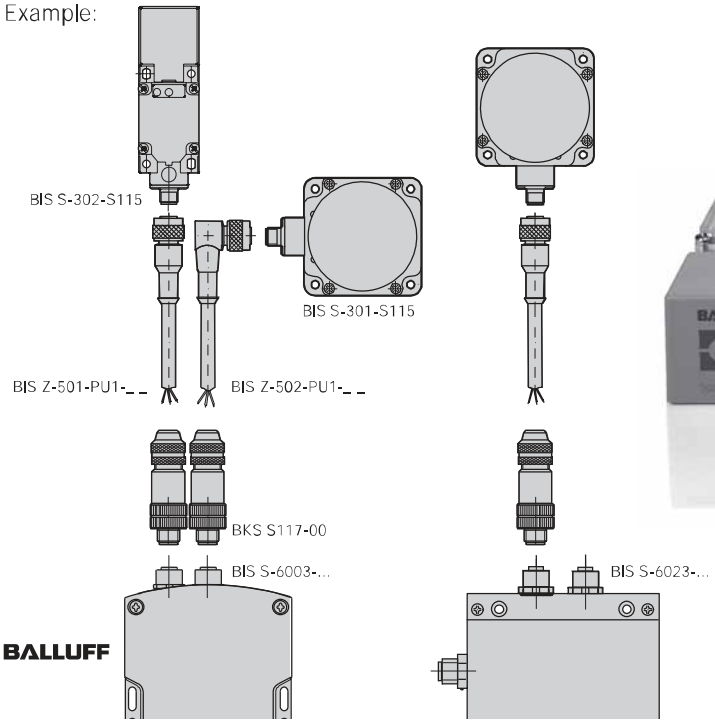

* please order connection cable separately,
see page 198
Please append cable length to ordering code!
See page 198

	80×80×40
	PBT
	round
	410 g

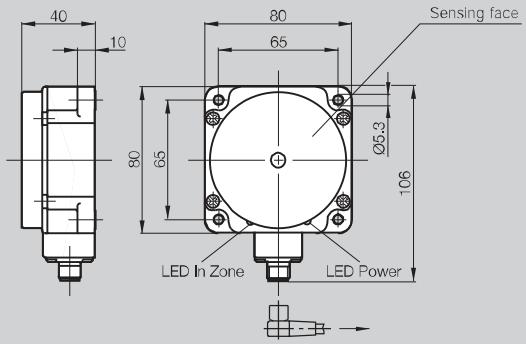

For installation see page 191!

	BIS S-301-S115	BIS S-150-_ _/A non-flush
	non-flush	
	0...+50 °C	10-50
	–20...+85 °C	10-50
	IP 67	±5
	Processor	±5
	BIS Z-501-PU1-_ _*, BIS Z-502-PU1-_ _*	±5
		±5
		±5
		±5
		±5
		±5

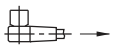 Connector orientation

more added value

First choice in static applications involving large quantities of data

Description	
Function	

Cost-effective identification – operate 2 read/write heads simultaneously

- Selectable division of the data width on the PROFI-BUS-DP, 4 to 128 bytes
- Free assigning of the data width for each read/write head
- Optimum data speed, internal cycle time is shorter than the BUS activation time
- Service-friendly, all parameter data are stored in an interchangeable memory
- BUS address selectable with switches
- Accepts all read/write heads
- Interface-compatible with BIS C and BIS L identification systems

Supply voltage	
Ripple	
Current	
Operating temperature	
Storage temperature	
Protection per IEC 60529	
Read/write head ports	
Service interface RS232	
Connection type	
Connection for	
Description interface/software:	
PROFIBUS-DP	
Accessories included	
Accessories (please order separately)	

The **compact class BIS -600_** with its reduced dimensions and various interface options can be used wherever ambient conditions require higher protection.

The devices are ideal for IP 65 and applications involving media that is not aggressive to PS plastic.

Small, compact, flexible and economical

	BIS S-6002-019-050-03-ST11	BIS S-6022-019-050-03-ST14
	read/write	read/write
	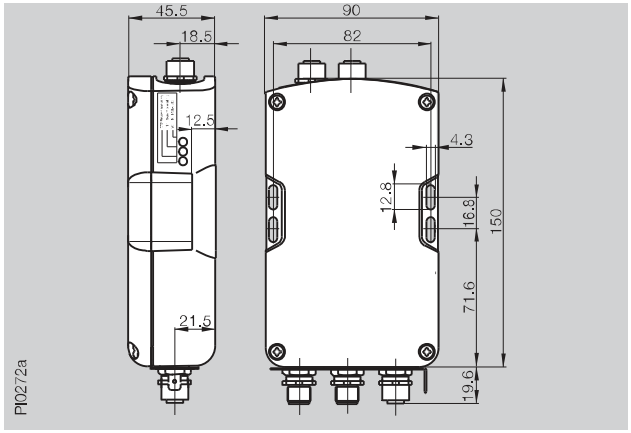	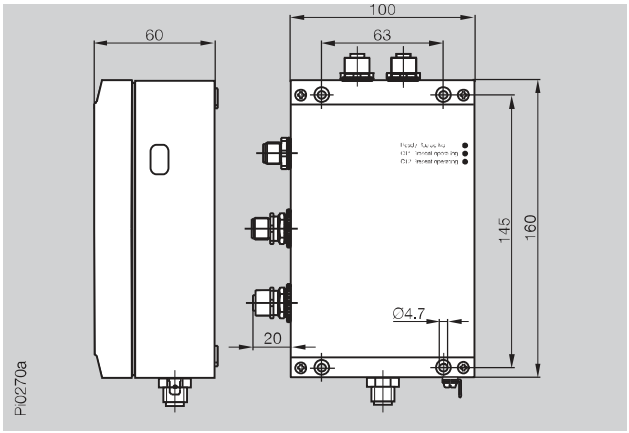
	24 V DC ±20 %	
	≤ 10 %	
	≤ 600 mA	
	0...+60 °C	
	0...+60 °C	
	IP 65/NEMA 12	
	2 external	
	yes	
	2 connectors round 5-pin, B-coded, 1 connector round 5-pin	2 connectors round 5-pin, B-coded, 2 connector round 5-pin
	2 read/write heads BIS S-3_ _	2 read/write heads BIS S-3_ _
	BIS S-6002-019-050-03-ST11	BIS S-6022-019-050-03-ST14
	Software GSD file	Software GSD file
	BKS 12-CS-01 Connector page 200/201	BKS 12-CS-01 Connector page 200/201

Threaded cover BKS 12-CS-01
coded for M12 B connector type

The **ruggedized version BIS S-602_** is in spite of the mechanically rugged die-cast aluminum housing a small, flexible processor which is available with various interface options.

Suitable for all applications with demanding requirements for mechanical stability and chemical resistance.

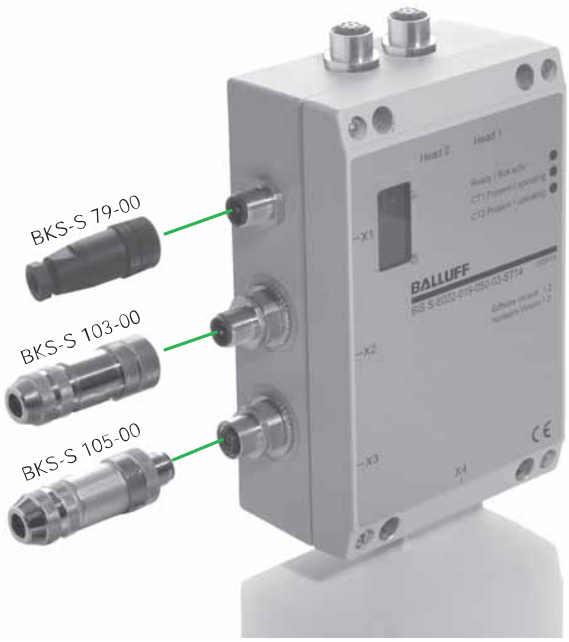

Description	
Function	

Cost-effective identification – operate 2 read/write heads simultaneously

- Freely selectable buffer size between 0 and 256 bytes
- Service-friendly, all parameter data are stored in an interchangeable memory
- Accepts all read/write heads
- Interface-compatible with BIS C and BIS L identification systems

CE

c UL us LISTED
Control No 3TLJ
File No E227256

DeviceNet™

Supply voltage	
Ripple	
Current	
Operating temperature	
Storage temperature	
Protection per IEC 60529	
Read/write head ports	
Service interface RS232	
Connection type	
Connection for	
Description interface/software:	
DeviceNet	
Accessories included	
Accessories (please order separately)	

The **compact class BIS -600_** with its reduced dimensions and various interface options can be used wherever ambient conditions require higher protection.

The devices are ideal for IP 65 and applications involving media that is not aggressive to PS plastic.

Small, compact, flexible and economical

	BIS S-6003-025-050-03-ST12	BIS S-6023-025-050-03-ST13
	read/write	read/write
	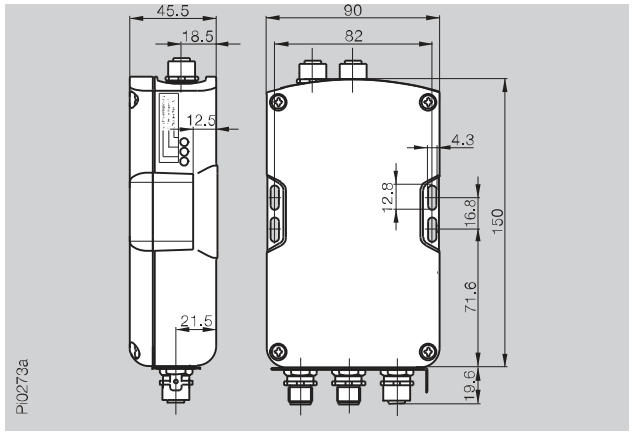	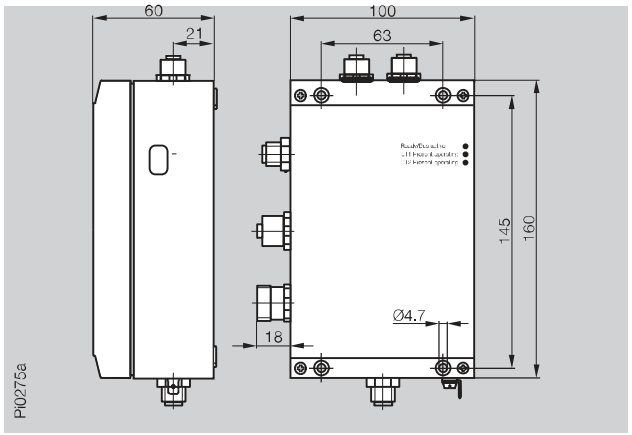
	24 V DC ±20 %	
	≤ 10 %	
	≤ 600 mA	
	0...+60 °C	
	0...+60 °C	
	IP 65/NEMA 12	
	2 external	
	yes	
	3 connectors round 5-pin	4 connectors round 5-pin
	2 read/write heads BIS S-3_ _	2 read/write heads BIS S-3_ _
	BIS S-6003-025-050-03-ST12	BIS S-6023-025-050-03-ST13
	Software EDS file	Software EDS file
		BKS 12-CS-01
	Connector page 200/204/205	Connector page 200/203

The **ruggedized version BIS S-602 _** is in spite of the mechanically rugged die-cast aluminum housing a small, flexible processor which is available with various interface options.

Suitable for all applications with demanding requirements for mechanical stability and chemical resistance.

Description	BIS S-6026-034-050-06-ST19
Function	read/write

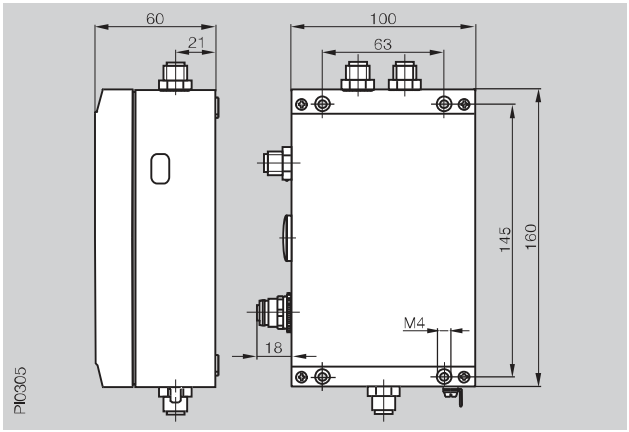

Supply voltage	24 V DC ±20 %
Ripple	≤ 10 %
Current	≤ 400 mA
Operating temperature	0...+60 °C
Storage temperature	0...+60 °C
Protection per IEC 60529	IP 65
Read/write head ports	2 external
Service interface RS232	yes
Connection type	Connector round 4-pin, D-coded 1 connector 5-pin 1 connector 4-pin
Connection for	Read/write heads BIS S-3_ _

Description interface/software:	
EtherNet/IP	BIS S-6026-034-050-06-ST19
Accessories included	Configuration software
Accessories (please order separately)	Connector page 200/202

Cost-effective identification –
operate 2 read/write heads simultaneously!

Description	BIS S-6027-039-050-06-ST19
Function	read/write

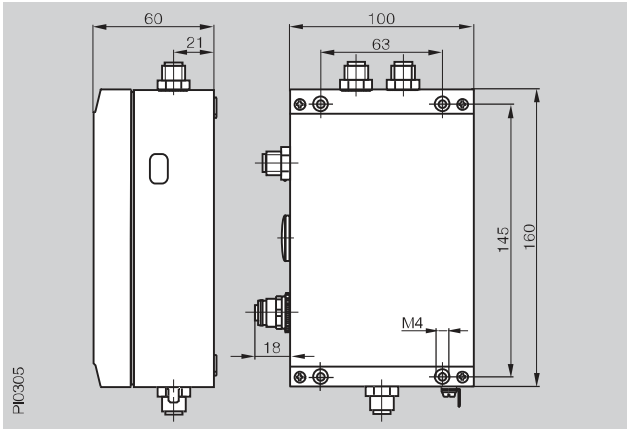

Supply voltage	24 V DC ±20 %
Ripple	≤ 10 %
Current	≤ 400 mA
Operating temperature	0...+50 °C
Storage temperature	0...+50 °C
Protection per IEC 60529	IP 65
Read/write head ports	2 external
Service interface RS232	yes
Connection type	Connector round 4-pin, D-coded 1 connector 5-pin 1 connector 4-pin
Connection for	Read/write heads BIS S-3_ _
Description interface/software:	
EtherNet mit Standard TCP/IP Potokoll	BIS S-6027-039-050-06-ST19
Accessories included	Configuration software
Accessories (please order separately)	Connector page 200/202

Order accessories separately!
Adapter cable for EtherNet
from M12 D-coded to
coupling RJ45/RJ45
BIS C-526-PVC-00.5
page 202

Industrial RFID Systems BIS S
Handy Programmer

Function	Read/write heads	read/write
Dimensions	∅ **15×63**	
Housing material	Plastic	ABS
Antenna type	round	

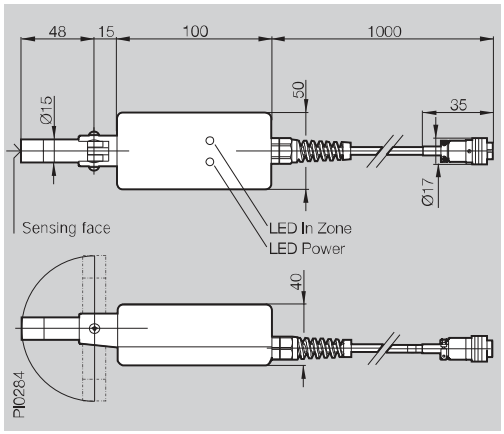

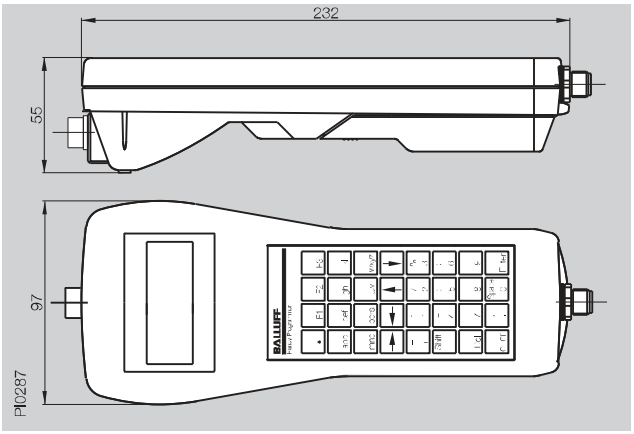

Ordering code	BIS S-850	BIS S-810-0-003
Keyboard		32 buttons, alphanumeric
Display		LCD-display, 20 characters/4 lines
Current draw		2.4 V rechargeable battery pack NiMH
Capacity		1500 mA/h
Interface		RS232/Balluff Dialog
Operating temperature	0...+40 °C	0...+50 °C
Storage temperature	–10...+50 °C	
Protection per IEC 60529	IP 54	IP 40
Read head connection	Fixed plug 6-pin	Fixed socket 6-pin
Connection to	BIS S-810	
Appropriate data carrier	BIS S-108_ _ BIS S-150_ _	
Accessories included		Carrying case

For maximum flexibility

The handy programmer with read/write function helps you stay mobile and independent. Benefit from increased mobility during repair work, for example. Needless to say, the handy programmer is fitted with an interface to a PC.

Installation in Steel

Clear zone dimensions

Data carriers	Fig.	Dimensions (in mm)		
		A	B	C
BIS S-108-_ _/L	1	10	10	11
BIS S-150-_ _/A	1	80	80	22

Read/write head	Fig.	Dimensions (in mm)		
		A	B	C
BIS S-301	2	80	80	40
BIS S-302	3	40	40	40
BIS S-303	4	40	40	40

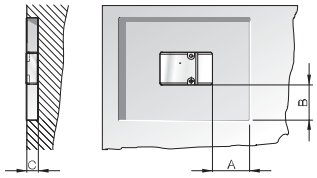

Fig. 1

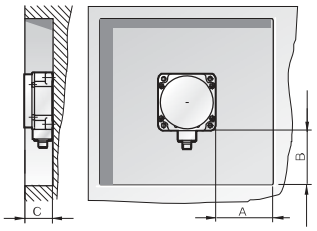

Fig. 2

Installation in Aluminum

Clear zone dimensions

Data carriers	Fig.	Dimensions (in mm)		
		A	B	C
BIS S-108-_ _/L	1	10	10	11
BIS S-150-_ _/A	1	80	80	22

Read/write head	Fig.	Dimensions (in mm)		
		A	B	C
BIS S-301	2	80	80	40
BIS S-302	3	40	40	40
BIS S-303	4	40	40	40

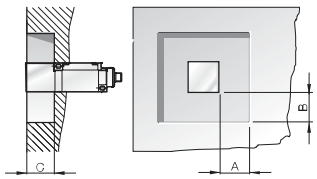

Fig. 3

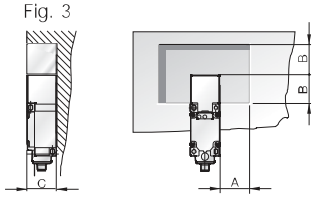

Fig. 4

Note

Depending on the combination of read/write head and data carrier, clear zone dimension A and B should always be selected for the larger of the components.

Read Times

Bytes	Read time [ms]
from 0 to 63	29
for each additional 64 bytes started add an additional	31
from 0 to 2047	990

Write Times

Byte	Write time [ms]
from 0 to 63	31 + n × 1.5
≥ 64	y × 31 + n × 1.5
from 0 to 2047	= max. 4064

n = Number of contiguous bytes to write
y = Number of blocks to process
Example:
Write 87 bytes starting with Address 187. Data carrier = 64-byte blocks. Blocks 2 to 5 are processed, since start address 187 is in Block 2 and end address 274 is in Block 5.

t = 4 × 31 + 87 × 1.5 = **255 ms**

Mechanical Strength

Datenträger und Schreib-/Leseköpfe

Ordering code	BIS S-1_ _, BIS S-3_ _
Shock load	100 g/6 ms per EN 60068-2-27 and 100 g/2 ms per EN 60068-2-29
Vibration	20 g, 10...2000 Hz per EN 60068-2-6

Processors

Ordering code	BIS S-6_ _ _
Shock load	15 g/11 ms per EN 60068-2-27 and 15 g/6 ms per EN 60068-2-29
Vibration	5 g, 10...150 Hz per EN 60068-2-6